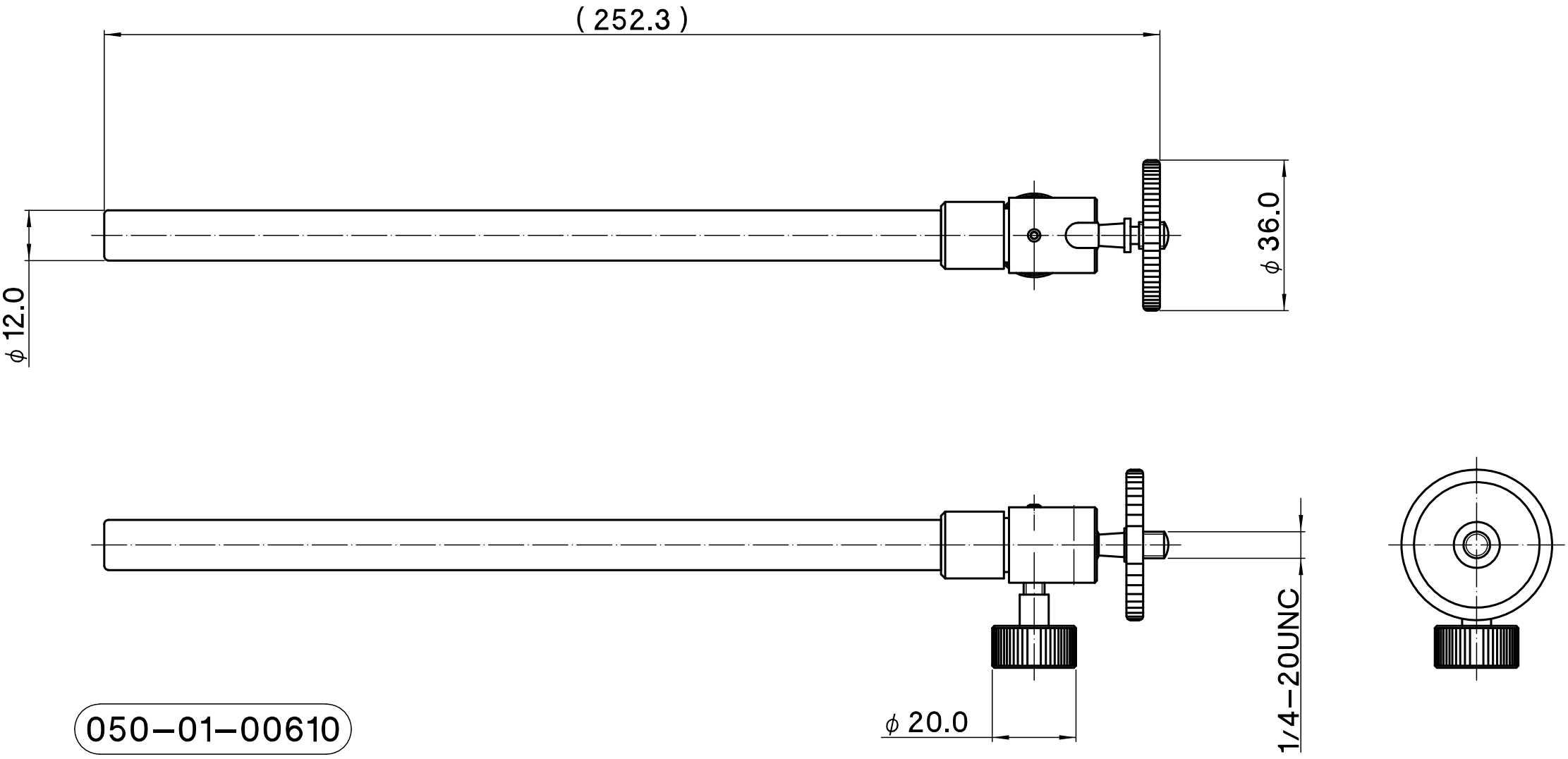

050–01–00610